ISSN 2395-1621

Redesign and Analysis of Automobile Wheel Rim

#1Pandit Shailesh, #2Gajjal Shekhar

1 shailesh27290@gmail.com
2 shekhar.gajjal@sinhgad.edu

#1234 Department of Mechanical Engineering,SavitribaiPhule Pune University
NBN Sinhgad School of Engineering, Ambegaon (Bk.), Pune-41

ABSTRACT

Thispaper deals with design of automobile wheel rim which aims to investigate the effect of stress distribution of wheel rim under radial load condition. The 3D model of wheel rim is done using CATIA software and Finite Element Analysis is carried out to analyse stress distribution of the steel wheel rim of 2 wheeler bike. Further analysis is done for the effect of tire air pressure in conjunction with the radial load on stress and displacement in rim. The scope of the loading analysis is limited to the load due to weight of the bike, occupants and inflation pressure only. In final part the thickness of the disc is reduced for the weight reduction considering the material from Steel AISI 1015, Forged Steel and Magnesium Alloy and based on result of FEA final material selection is done.

Keywords— **Finite Element Analysis, Forged Steel, Magnesium Alloy, Steel AISI 1015, Stress Distribution, Wheel Rim**

ARTICLE INFO

Article History

Received :18th November 2015

Received in revised form :

19th November 2015

Accepted : 21st November , 2015

Published online :

22nd November 2015

I INTRODUCTION

The wheel rim is important structural member of vehicle suspension system which supports static as well as dynamic load encountered during vehicle operation. They must design it carefully. Safety and economy are major concern while designing. Also Style, weight, manufacturability and performance are the technical issues related to the design of wheel rim. Early wheels were simple wooden discs with hole for axle. The spoke wheel were introduced recently and allowed use of lighter and efficient wheels. These wheels are made of steel, aluminium alloy, magnesium alloy. Alloy wheel differ from normal steel wheel because of their light weight. They are also better heat conductor than steel which improves heat dissipation.

Automotive manufacturers are working on developing safe, fuel efficient and lightweight vehicular components. In the real service conditions, the determination of mechanical behaviour of the wheel is important, but the testing and inspection of the wheels during their development process is time consuming and costly. For economic reasons, it is important to reduce the time spent during the development and testing phase of a new wheel rim. For this purpose, Finite Element Analysis (FEA) is generally used in the design stage of product development to investigate the mechanical performance of prototype designs. FEA simulation of the wheel rim can significantly reduce the time and cost required to finalise the wheel design. Thus, the design modifications could be conducted on a component to examine how the change would influence its performance, without making costly alteration to tooling and equipment in real production.

I. LITERATURE SURVEY

M. Saran Theja, M. Vamsi Krishna [8] performed analysis of the stress and the displacement distribution is done by comparing the results obtained. This paper deals with the static & fatigue analysis of the wheel. A typical alloy wheel configuration of Suzuki GS150R commercial vehicle is chosen for study. In this work the overall dimensions are controlled by reducing number of spokes to the alloy wheel with same functioning stability and less weight. Thestress and displacements in four spoke alloy wheel are lesser than six and five spokes alloy wheels.

The paper of Sourav Das [9] deals with the design of aluminium alloy wheel for automobile application which is carried out paying special reference to optimization of the mass of the wheel. The Finite Element analysis it shows that the optimized mass of the wheel rim could be reduced to around 50% as compared to the existing solid disc type Al alloy wheel. The FE analysis shows that the stress generated in the optimized component is well below the actual yield stress of the Al alloy.

II. MODELLING

The CAD model of wheel rim is prepared based on standard nomenclature of given design. Figure shows the CAD model of wheel rim before optimisation.

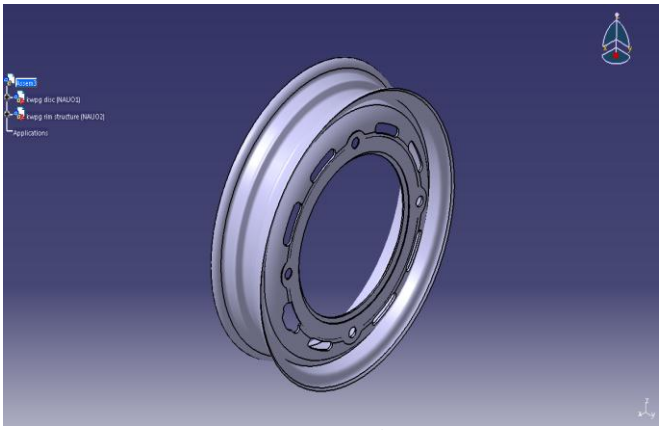

Figure 1: 3D CAD Model of Wheel Rim

A. Wheel Rim Specification

Wheel Rim – Honda Activa
Rim Designation – 3B*10
Where,
3 – Rim width in inch
B – Flange Shape
10 – Rim Diameter in inch
Wheel rim material – Steel AISI 1015

III. ANALYSIS

For the given specification of the wheel, the static analysis is performed using solid works tofind the maximum stress and the corresponding displacement.
Meshing :Meshing involves division of the entire of model into small pieces called elements. This is done bymeshing. It is convenient to select the Standard mesh because of wheel structures, so that shape of theobject will not alter. The meshing for wheel rim is shown in figure 2.

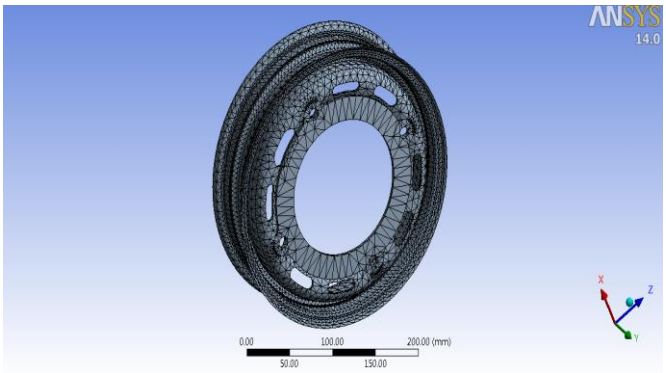

Figure 2: Meshing of Model

Boundary Condition: The boundary condition applied are inflation pressure around the wheel bead and fixed support are given at nut bolt hole as shown in figure 3.

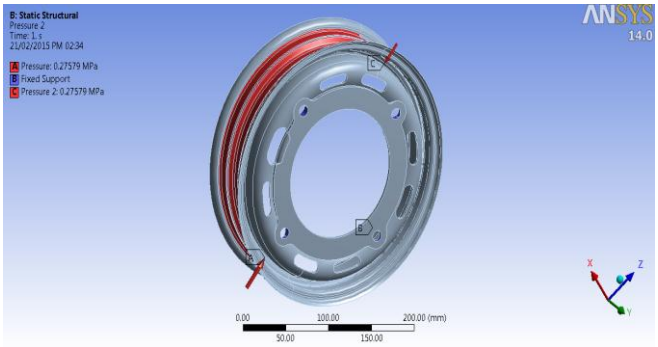

Figure 3: Boundary Condition

A. Analysis with Three Different tire Inflation Pressure

In order to evaluate the effect of inflation pressure the analysis of rim carried out with three values of tire inflation pressures

1) 275.79 kpa being maximum operating pressure
2) 227.53 kpa being normal operating pressure
3) 193.05 kpa being minimum operating pressure

The samples of analysis for inflation pressure of 275.79 kpa are shown in figure 4, 5, 6 showing maximum deflection, stress and maximum Von Mises stress respectively.

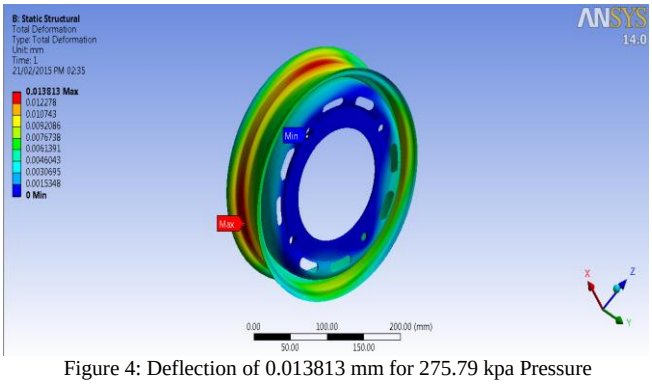

Figure 4: Deflection of 0.013813 mm for 275.79 kpa Pressure

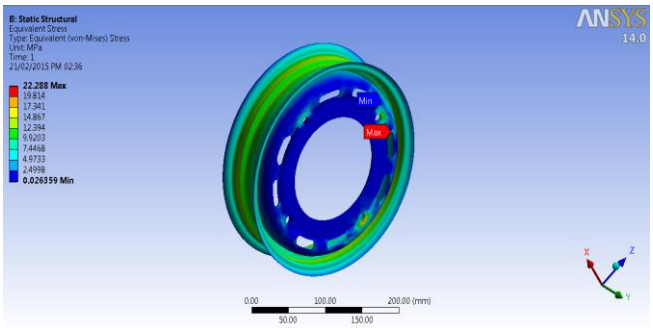

Figure 5: Generated Stress 22.288 MPa for 275.79 kpa Pressure

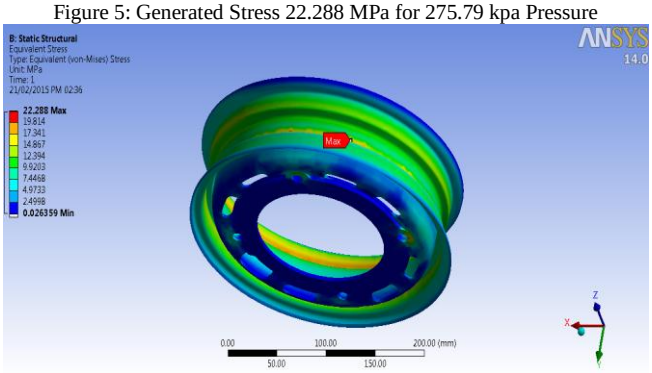

Figure 6: Max Stress Location 22.288 MPa for 275.79 kpa Pressure

In table I FEA analysis results of deflection and stress for the all three pressure are shown.

Table I FEA Analysis with Different Tire Inflation Pressure

Applied Load Condition (kpa)	Max Displacement (mm)	Max Von Mises Stress (N/mm^2)
275.79	**0.013813**	**22.288**
227.53	**0.011396**	**18.388**
193.05	**0.0096689**	**15.601**

B. Analysis with Constant Tyre Inflation Pressure and Variation in Radial Load Applied on Rim

Mass of Bike
Dead Weight of Bike = 120 kg,
Other Loads = 20 Kg
Total Gross Weight = 120 + 20 = 140 Kg
Considering worst case of weight on vehicle:
Mass of the vehicle including rider and other four more persons
M = 140 + 65 x 4
= 140 + 260
= 400 kg
Hence, maximum average weight on each wheel is 200 kg.

As tire inflation pressure is one of the constant force acting on rim throughout its working conditions, while the radial load acting on rim is variable. In order to evaluate the performance of rim for different radial load, analysis carried out with constant tire inflation pressure of 275.79 kPa and different radial load employed on each rim as follows

1. 150 kg – Low load
2. 175 kg – Average Load
3. 200 kg – High Load

The samples of analysis for load of 150 kg are shown in figure 7, 8 showing deflection, stressrespectively

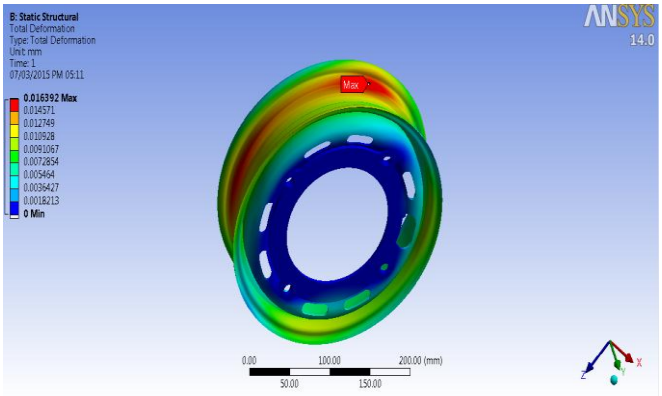

Figure 7: Deflection of 0.016392 mm for 150 kg Load

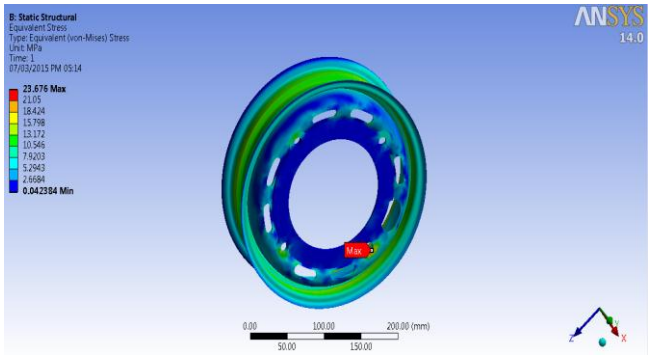

Figure 8: Generated Stress 23.676 MPa for 150 kg Load

In table II FEA analysis results of deflection and stress for the all three loads with constant tire inflation pressure are shown

Table II FEA Analysis with Different Radial Loads

Applied Load Condition (kg)	Max Displacement (mm)	Max Von Mises Stress (N/mm^2)
150	**0.016392**	**23.676**
175	**0.017991**	**29.224**
200	**0.019776**	**34.772**

C. Analysis based on materials

The FEA analysis is done using three different materials as Steel AISI 1015, Forged Steel and Magnesium Alloy. The radial load of 2000N and tire inflation pressure of 275.79 kpa is applied. Based on this analysis final selection of material for wheel rim is done.

Table III Properties of Wheel Rim Materials

Material	Steel – AISI 1015	Mg Alloy	Forged Steel
Ultimate Tensile Strength (MPa)	**385**	**425**	**720**
Yield Strength (MPa)	**325**	**382**	**625**
Youngs Modulus (GPa)	**200**	**45**	**221**

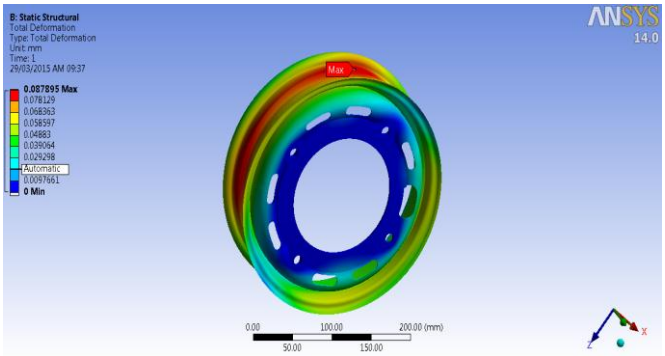

Figure 9: Deflection of 0.087895 mm for Mg Alloy

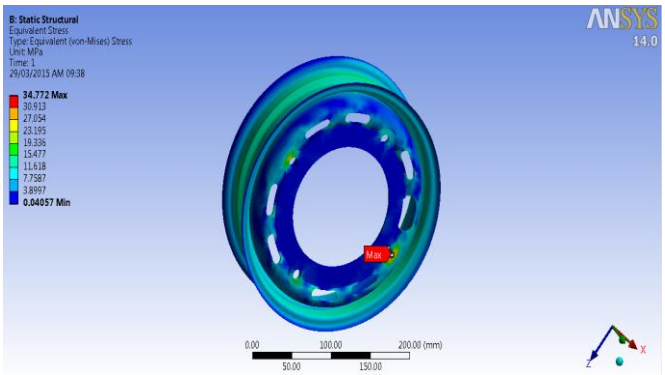

Figure 10: Generated Stress 34.772 MPa for Mg Alloy

In table IV FEA analysis results of deflection and stress for the different materials with 2000N load and 275.79 kpa tire inflation pressure are shown.

Table IV FEA Analysis with Different Materials

Material	Max Displacement (mm)	Max Von Mises Stress (N/mm^2)
Steel AISI 1015	**0.019776**	**34.772**
Forged Steel	**0.017897**	**34.772**
Magnesium Alloy	**0.087895**	**34.772**

D. Analysis Based on Disc Thickness

After selecting the material the weight reduction is done by reducing the thickness of disc of wheel rim. Now present disc thickness is 3.5 mm, the disc is to be tested for thickness from 3 to 2.4 mm with 0.2 mm reduction in size. The material used is Forged steel with maximum radial load of 2000 N and maximumtire inflation pressure of 275.79 kPa.

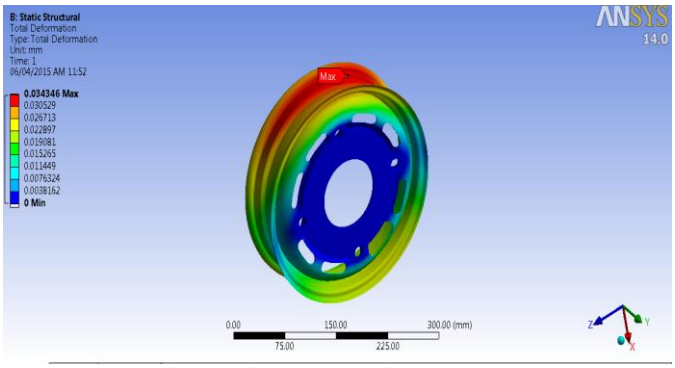

Figure 11: Deflection of 0.034346 mm for 2.8mm Disc Thickness

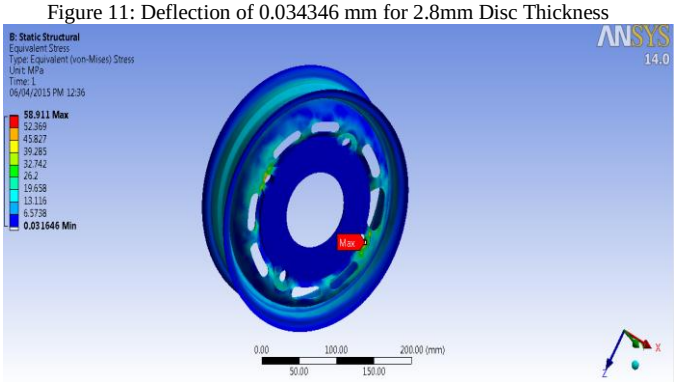

Figure 12: Generated Stress of 58.911 MPa for 2.8mm Disc Thickness

In table V FEA analysis results of deflection and stress for Steel with the different disc thicknessand 2000N load and 275.79 kpa tire inflation pressure are shown.

Table III FEA Analysis with Different Disc Thickness

Thickness (mm)	Max Displacement (mm)	Max Von Mises Stress (N/mm^2)
3.0	**0.031421**	**52.253**
2.8	**0.034346**	**58.911**
2.6	**0.038718**	**67.367**
2.4	**0.042249**	**75.397**

IV. Conclusions

The Finite Element Analysis is carried out for different loading condition for wheel rim. From table IV it is seen that Forged steel has less displacement as compared to magnesium alloy and Steel AISI 1015 so it is selected for the manufacturing of wheel rims. Using same material disc thickness is reduced and for disc thickness below 2.8mm maximum stress and displacement are high so disc thickness selected is 2.8mm.

Acknowledgment

The authors would like to thank the Department of Mechanical Engineering, SavitribaiPhule University (SPPU) for their support in this work.

References

[1] Emmanuel M. Adigio and Ebughni O. Nangi, “Computer Aided Design and Simulation of Radial Fatigue Test of Automobile Rim Using ANSYS” in IOSR Journal of Mechanical and Civil Engineering

(IOSR-JMCE) e-ISSN: 2278-1684, p-ISSN: 2320-334X, Volume 11, Issue 1 Ver. IV, February 2014, pp. 68-73.

[2] H. Akbulut, "On optimization of a car rim using Finite element method" in Elsevier Science B.V. Finite Elements in Analysis and Design, 39, 2003, pp. 433–443.

[3] Liangmo Wang, Yufa Chen, Chenzhi Wang, Qingzheng, "Fatigue Life Analysis of Aluminum Wheels by Simulation of Rotary Fatigue" in Journal of Mechanical Engineering, 2011, pp. 31-39.

[4] N. Satyanarayana&Ch.Sambaiah, "Fatigue Analysis of Aluminum Alloy Wheel Under Radial Load" in International Journal of Mechanical and Industrial Engineering (IJMIE), ISSN No. 2231–6477, Volume 2, Issue 1, 2012.

[5] P. V. Ravi Kumar, Prof. R. SatyaMeher, "Topology Optimization of Aluminum Alloy Wheel" in International Journal of Modern Engineering Research (IJMER), ISSN: 2249-6645, Volume 3, Issue 3, May - June 2013, pp. 1548-1553.

[6] S. Kalyanasundaram "Finite element analysis and optimization of composite wheel chair wheels" in Elsevier Science B.V. ScienceDirect Composite Structures, 75, 2006, pp. 393–399.

[7] S Vikranth Deepak, C Naresh, Syed AltafHussain, "ModellingAnd Analysis Of Alloy Wheel For Four Wheeler Vehicle" in International Journal of Mechanical Engineering and Robotic Reasearch ISSN 2278-0149, Volume 1, No 3, October 2012.

[8] Saran Theja, M. Vamsi Krishna, "Structural and Fatigue Analysis of Two Wheeler Lighter Weight Alloy Wheel" in IOSR Journal of Mechanical and Civil Engineering (IOSR-JMCE) e-ISSN: 2278-1684, Volume 8, Issue 2, July - August 2013, pp. 35-45.

[9] Sourav Das, "Design and Weight Optimization of Aluminum Alloy Wheel" Altair Engineering India Pvt. Ltd, Bangalore in International Journal of Scientific and Research Publications, ISSN 2250-3153, Volume 4, Issue 6, June 2014.

[10] T. Siva Prasad, T. Krishnaiah, J. Md. Iliyas, M.Jayapal Reddy, "A Review on Modeling and Analysis of Car Wheel Rim using CATIA & ANSYS" in International Journal of Innovative Science and Modern Engineering (IJISME) ISSN: 2319-6386, Volume 2, Issue 6, May 2014.

[11] Zhanbiao Li "Stress and fatigue life analyses of a five-piece rim and the proposed optimization with a two-piece rim" in Elsevier Science B.V. ScienceDirect Journal of Terramechanics, 52, 2014, pp. 31–45.